INCLINATION (SLOPE) OF RAIL SEATS NOT
TO EXCEED ± 0,5 mm
MEASURED AT 150 mm LENGTH

RELATIVE TWIST OF RAIL SEATS NOT
TO EXCEED <0,7mm MEASURED
AT 1523/100 mm LENGTH/WIDTH

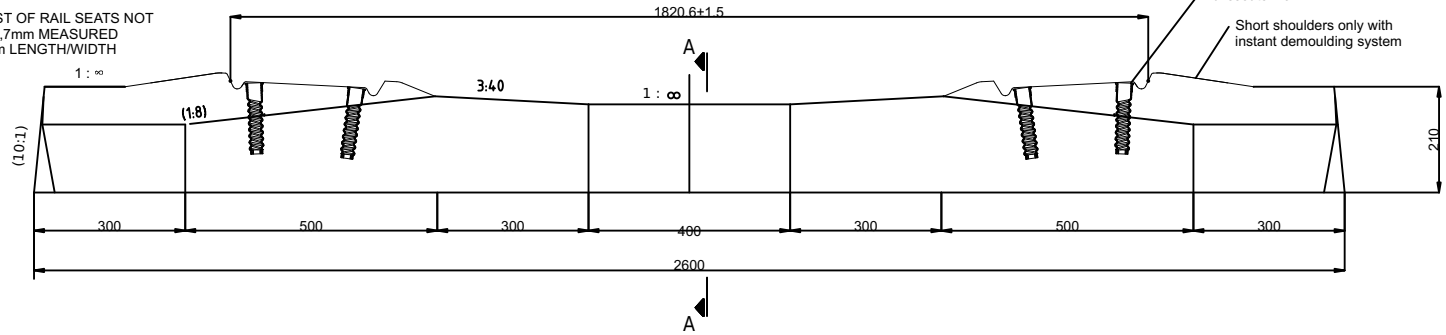

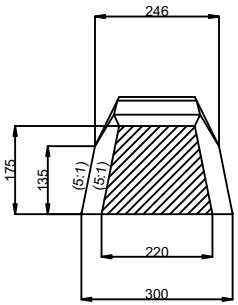

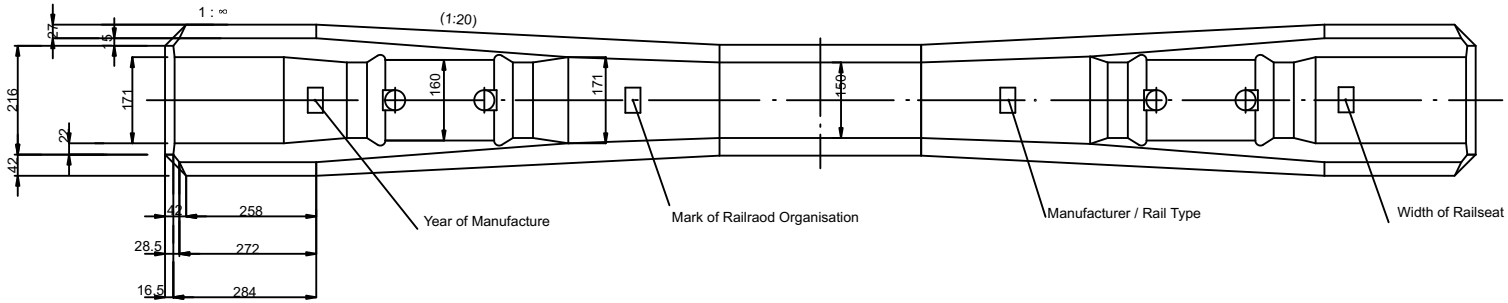

A - A

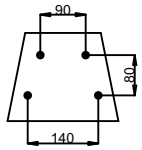

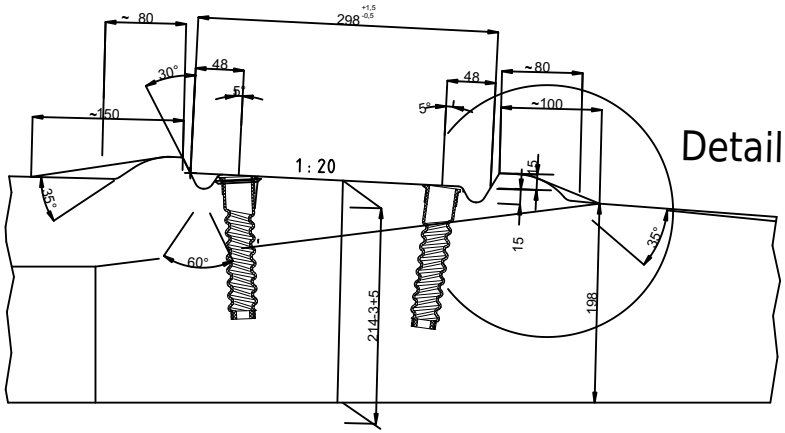

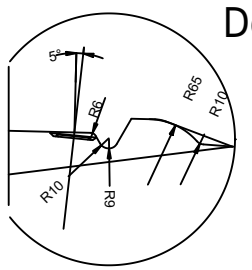

REMARK:
PRESTRESSING STEEL:
4 x Ø9.5 mm, L=2546 mm
(St 1375/1570, profiled)

INITIAL PRESTRESSING FORCE:
V = 325(-5+15) kN/SLEEPER

CONCRETE QUALITY: C50/60
CONCRETE VOLUME: approx. 114 l
CONCRETE WEIGHT: approx. 280 kg
(including reinforcement)
TOTAL WEIGHT: approx. 303,5 kg
(including rail fastening)

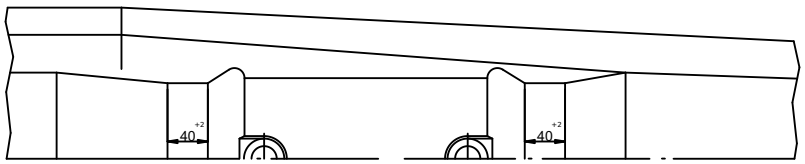

This drawing with all associated supplements and calculations is our intellectual property. It may not be accessed to third parties without our explicit consent. Neither be multiplied, published, or used for any other than the agreed upon purpose.

CAD-Drawing do not change manually	Allowance	(surface.)	scale 1:15
			material: concrete
			LMGR B70 490.01
			Mat.-Nr. 489 981
	Datum	Name	
proc.	12.02.07	Ebeling	Prestressed Monobloc concrete sleeper
prov.	13.04.22	DemPap	
Norm			
modification / Date / name	Leonhard Moll Betonwerke GmbH & Co KG, Lindwurmstraße 129, 80337 München		B 70 W 14 GR
			Blatt / Bl.
			Dateiname: B70-W60-GR.dwg
			date of plot 21.06.2023